Safe-Latch Door Survey

School Name	Contact Name	Phone Number

In-Swing

Standing in the Classroom

If you pull the door towards you when opening the door while standing in the classroom.

Out-Swing

Standing in the Classroom

If you push the door away from you when opening the door while standing in the classroom.

Panic Bar or Crash Bar

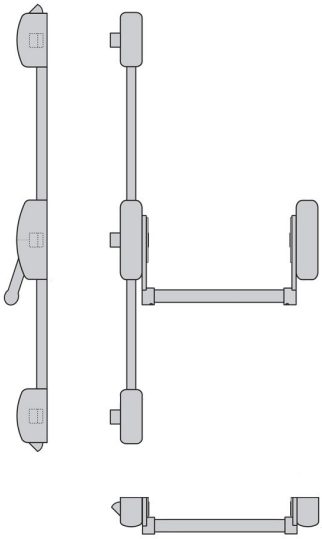

Room Number	In-Swing	Out-Swing	Panic Bar or Crash Bar

Room Number	In-Swing	Out-Swing	Panic Bar or Crash Bar